CORNER I.D. #782

CORNER RECORD
ST. JOSEPH COUNTY, IN

OFFICE OF THE COUNTY SURVEYOR, JOHN McNAMARA, PLS
227 W. JEFFERSON BLVD.
SOUTH BEND, IN 46601 PHONE: (574)235-9631

DATE: 04/11/08 & 08/05/08
PREPARED BY: THOMAS A. OESTERLING, PLS
FIELD CREW: STEVE KARACSON

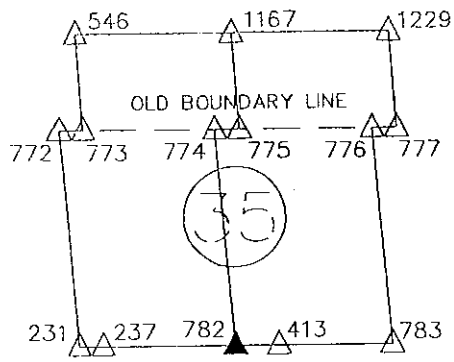

SEC.35,T37N,R2E

CENTRE TOWNSHIP

N=2317254.494 E=164267.450

NOT TO SCALE

SURFACE MARK: SET HARRISON MONUMENT
ALL DISTANCE UNITS ARE U.S. SURVEY FEET

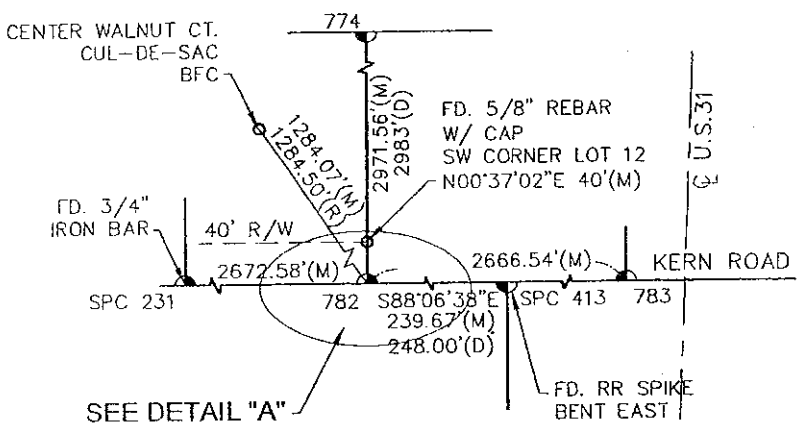

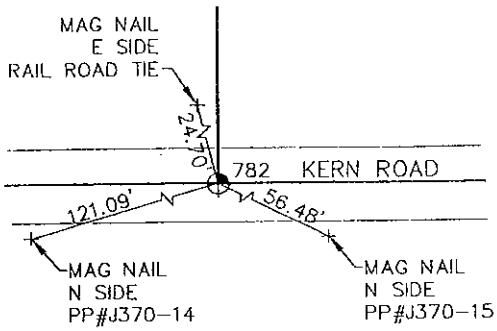

DETAIL "A"

LEGEND

- o FD. MONUMENT
- (D) 1882
- (M) MEASURED
- (R) INSTR #9837229
- (BPC) BEST FIT OF CENTER OF CUL-DE-SAC (3 LOT CORNER MON. FD.)

SURVEYOR'S REPORT

ACCORDING TO THE COUNTY CORNER CODE DOSSIER, NO ORIGINAL MONUMENT OR WITNESS POINTS EXIST FOR SUBJECT CORNER. SUBJECT CORNER WAS ESTABLISHED FROM A MONUMENT FOUND AND ACCEPTED AS MARKING THE SOUTHWEST CORNER OF LOT 12 IN WALNUT FARMS SUBDIVISION AS RECORDED UNDER INSTRUMENT # 9837229. ASSUMING THE FOUND MONUMENT AS MARKING SPC STATION 413 AND HAVING BEEN PERPETUATED AT ITS' ORIGINAL LOCATION, THE UNCERTAINTY OF THE LOCATION OF SUBJECT CORNER IS 8 FEET IN THE EAST WEST DIRECTION. THE ESTABLISHED LOCATION OF SUBJECT CORNER IS IN CONFORMITY WITH LINES OF POSSESSION ALONG AND BETWEEN SUBJECT CORNER AND SPC STATION 774.

THE MEASURED COORDINATE VALUES AND DISTANCES SHOWN ON THE PLAT OF SURVEY ARE A RESULT OF REAL TIME KINEMATIC OBSERVATIONS ORIGINATING FROM A PERMANENT BASE STATION WHICH POSITION IS BASED UPON A MINIMALLY CONSTRAINED LEAST SQUARES ADJUSTED SURVEY. SAID SURVEY CONTAINED NATIONAL GEODETIC SURVEY (NGS), 1ST ORDER HORIZONTAL (OR BETTER) CONTROL MONUMENTS: DG9007, ME3288, ME2210, ME0042; UTILIZING THEIR PUBLISHED INDIANA STATE PLANE COORDINATE, EAST ZONE (1302), NORTH AMERICAN DATUM 83 (1997 ADJUSTMENT) COORDINATE VALUES. THIS SURVEY MEETS OR EXCEEDS THE RPA REQUIREMENTS OF AN URBAN SURVEY (PER IAC 865 1-12-7).

Thomas A. Oesterling 9/16/08

THOMAS A. OESTERLING
REG. LAND SURVEYOR NO. 11462
STATE OF INDIANA
ABONMARCHE CONSULTANTS OF INDIANA, LLC

DATE

THOMAS A. OESTERLING
REGISTERED
No.
11462
STATE OF
INDIANA
LAND SURVEYOR

E:\CIVIL 3D\ENG PROJ\ 1\dwg\MASTER.dwg, 9/15/2008 4:12:26 PM, 1:1