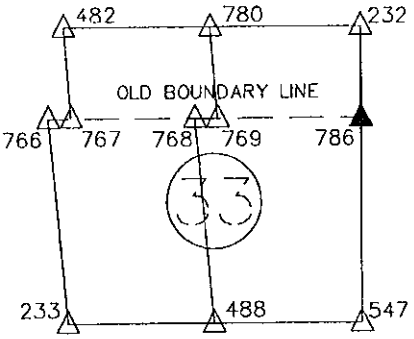

CORNER I.D. #786

CORNER RECORD
ST. JOSEPH COUNTY, IN

OFFICE OF THE COUNTY SURVEYOR, JOHN McNAMARA, PLS
227 W. JEFFERSON BLVD.
SOUTH BEND, IN 46601 PHONE: (574)235-9631

DATE: 09/04/08
PREPARED BY: THOMAS A. OESTERLING, PLS
FIELD CREW: STEVE KARACSON

NOT TO SCALE

GREENE TOWNSHIP

N=2320236.182 E=157047.506
LATITUDE=41°36'59.272"N LONGITUDE=86°17'31.811"W

SEC.33,T37N,R2E

SURFACE MARK: SET HARRISON MONUMENT
ALL DISTANCE UNITS ARE U.S. SURVEY FEET

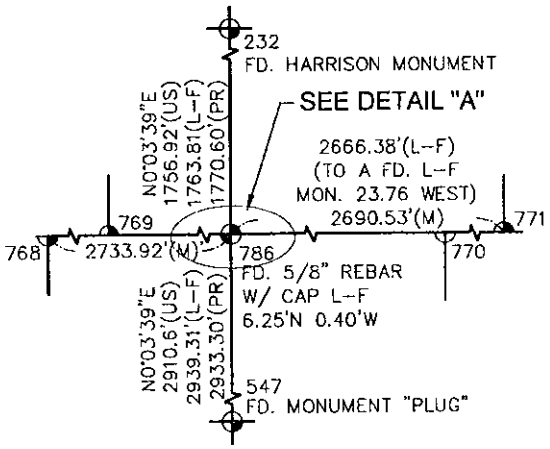

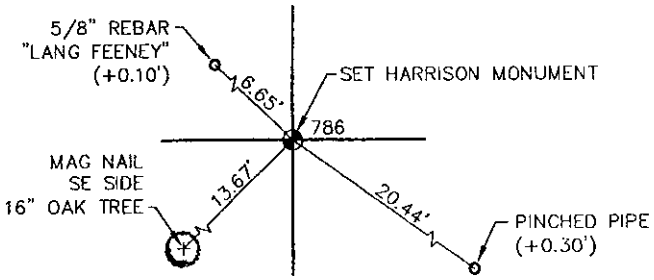

DETAIL "A"

LEGEND

⊕	SUBJECT TO SPC STA	(M)	MEASURED
(L-F)	LANG FEENEY SURVEY INSTR #0705517	(US)	ORIG. PLS (T.K. FIELD BOOK)
		(PR)	PRORATED - (M/US)

SURVEYOR'S REPORT

ACCORDING TO THE COUNTY CORNER CODE DOSSIER NO ORIGINAL PLS MONUMENTS OR WITNESS POINTS EXIST FOR SUBJECT CORNER, DESIGNATED HEREIN AS POINT #786. THIS POINT IN INITIAL ANALYSIS CONSIDERED ACCEPTING THE FOUND L-F MONUMENT MARKING THE BOUNDARY SURVEY CORNER SHOWN ON RECORDED SURVEY INSTRUMENT #0705517. UPON FURTHER RESEARCH OF PARENT PARCEL, RECORDED UNDER INSTRUMENT #9636129, FROM WHICH SAID LANG-FEENEY SURVEY WAS BASED, SPECIFICALLY CALLED FOR THE OLD INDIANA AND MICHIGAN BOUNDARY AS THE NORTH BOUNDARY. IT IS APPARENT THAT SAID LAND-FEENEY SURVEY ESTABLISHED THE SUBJECT CORNER THE RECORD, INSTRUMENT #9636129, A DISTANCE FROM THE SOUTHEAST CORNER OF SECTION 33 AS VERIFIED BY THIS SURVEY. TO ESTABLISH THE OLD BOUNDARY LINE, THIS SURVEY PRORATED THE NORTH-SOUTH MEASURED DISTANCES TO THE RECORD US PLS DISTANCES AS SHOWN IN TOM KELLER FIELD BOOK NOTES FOR THE EAST LINE OF SECTION 33. NO EVIDENCE OF THE OCCUPATION OR POSSESSION, OTHER THAN THE LANG-FEENEY MONUMENT, WAS FOUND TO EXIST FOR THE SUBJECT CORNER. THE UNCERTAINTY IN LOCATION OF SUBJECT CORNER IS THE DISTANCE TO THE FOUND LANG-FEENEY MONUMENT AS SHOWN ON THIS PLAT OF SURVEY.

THE MEASURED COORDINATE VALUES AND DISTANCES SHOWN ON THE PLAT OF SURVEY ARE A RESULT OF REAL TIME KINEMATIC OBSERVATIONS ORIGINATING FROM A PERMANENT BASE STATION WHICH POSITION IS BASED UPON A MINIMALLY CONSTRAINED LEAST SQUARES ADJUSTED SURVEY. SAID SURVEY CONTAINED NATIONAL GEODETIC SURVEY (NGS), 1ST ORDER HORIZONTAL (OR BETTER) CONTROL MONUMENTS: DG9007, ME3288, ME2210, ME0042; UTILIZING THEIR PUBLISHED INDIANA STATE PLANE COORDINATE, EAST ZONE (1301), NORTH AMERICAN DATUM 83 (1997 ADJUSTMENT) COORDINATE VALUES. THIS SURVEY MEETS OR EXCEEDS THE RPA REQUIREMENTS OF AN URBAN SURVEY (PER IAC 865 1-12-7).

GRID AND GEODETIC COORDINATES ARE SHOWN TO THREE DECIMAL PLACES TO ENSURE ACCURACY WHEN WORKING WITH THESE NUMBERS. IT IS NOT INTENDED AS A STATEMENT OF RELATIVE POSITIONAL ACCURACY.

Thomas A. Oesterling 4/27/09

THOMAS A. OESTERLING
REG. LAND SURVEYOR NO. 11462
STATE OF INDIANA
ABONMARCHE CONSULTANTS OF INDIANA, LLC

DATE

THOMAS A. OESTERLING
REGISTERED
No.
11462
STATE OF
INDIANA
LAND SURVEYOR

E:\CIVIL 3D\ENG PROJ\M80071\dwg\MASTER.dwg, 786, 4/21/2009 8:53:14 AM, jmueller, 1:1