GPS SURVEY - DATA SHEET

PROJECT NAME:	JOB NO:	STATION NO: 1265 STATION NAME:

Deg., Min. & Sec.	STATE PLANE COORDINATE SYSTEM OF 1983 BASED ON NORTH AMERICAN DATUM OF 1983.
Latitude Longitude	North (CALCULATED) East 2366904.4074 151466.8218
Elevation Geoid Height Ellipsoid Height Elevation + Geoid Height = Height	Convergence: Scale Factor: Elevation Factor:

SKETCH:

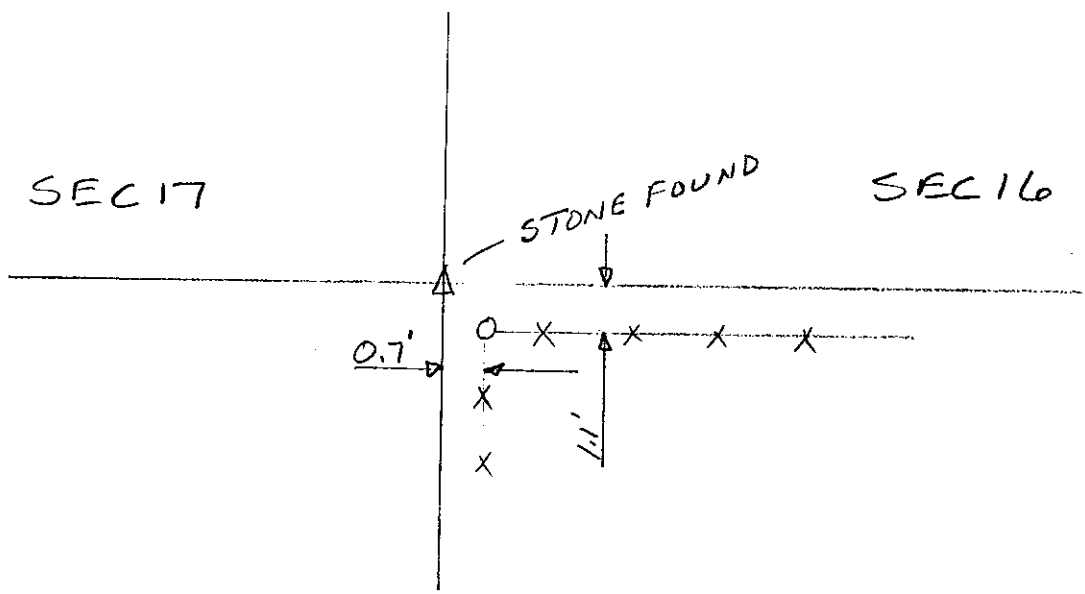

STATE: INDIANA ZONE: EAST

DATE: 2-11-03

REMARKS..... STONE FOUND

E 1/4 CORNER
SEC 17 T38N R2E

DATA SHEET PREPARED BY:
PALM