CORNER I.D. #1356

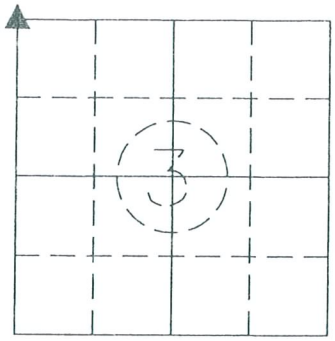

SEC.3,T37N,R1E

CORNER RECORD
ST. JOSEPH COUNTY, IN

OFFICE OF THE COUNTY SURVEYOR, JOHN McNAMARA, PLS
227 W. JEFFERSON BLVD.
SOUTH BEND, IN 46601 PHONE: (574)235-9631

DATE: 09/08/06
PREPARED BY: THOMAS A. OESTERLING, PLS
FIELD CREW: STEVE KARACSON, JAMES E. PALEN

NOT TO SCALE

WARREN TOWNSHIP

N=~~2348690.153~~ 2348690.832 E=~~125293.297~~ 125293.096

I.S.P.C., EAST ZONE, NAD 83(1997) COORDINATE VALUES BASED UPON MINIMALLY CONSTRAINED LEAST SQUARES ADJUSTMENT OF NGS, ~~2ND~~ 1ST ORDER HORIZONTAL (OR BETTER) CONTROL MONUMENTS: ~~ME2193, ME2269, ME2346, ME2408~~ DG9007, ME3288, ME2210, ME0042.

SUBURBAN SURVEY (PER IAC 865 1-12-7)

SURFACE MARK: FD. 1-1/4" IRON PIPE (-0.1')

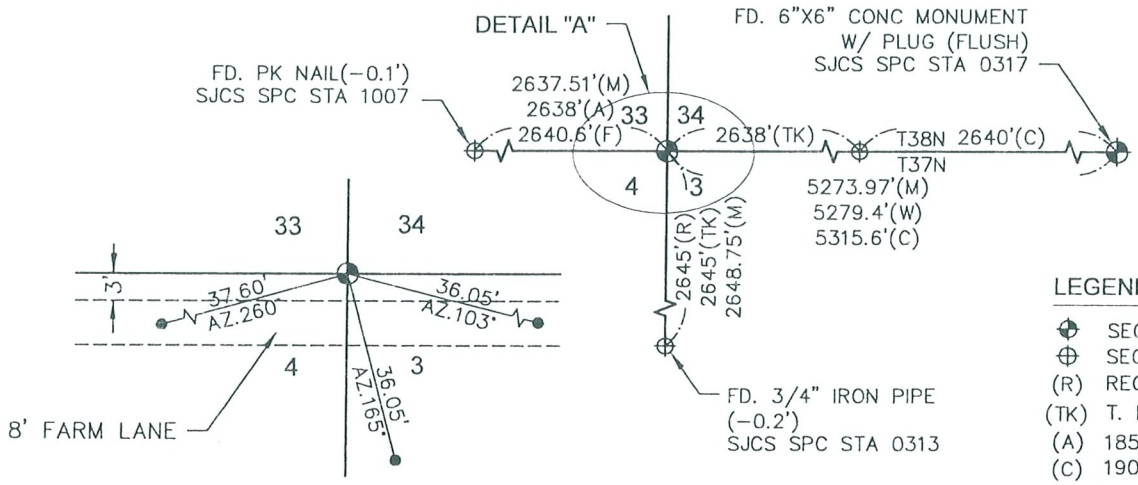

DETAIL "A"

LEGEND

- SECTION CORNER
- SECTION 1/4 CORNER
- (R) RECORD INSTR#7912552
- (TK) T. KELLER
- (A) 1858 RECORD
- (C) 1900 RECORD
- (F) 1902 RECORD
- (M) MEASURED
- (W) WPA RECORD
- SET 5/8" REBAR W/ ABONMARCHE CONTROL CAP

SURVEYOR'S REPORT

ACCORDING TO THE COUNTY CORNER CODE DOSSIER, WPA IN 1930, BOOK R1E, P29, LAST CHECKED THE SUBJECT CORNER. THE MONUMENT WAS DESCRIBED AS A 6" X 6" X 24" STONE WITH 4" X 4" WITNESS POSTS 17 FEET NORTH AND 17 FEET SOUTH OF CORNER. NEITHER SAID MONUMENT NOR ITS REFERENCES WERE FOUND; HOWEVER A 1-1/4" IRON PIPE WAS FOUND. USING THE RECORD MEASURE OF 7916 FEET (2640 + 2638 + 2638), PRORATED TO THE MEASURED DISTANCE BETWEEN THE NORTH 1/4 CORNER OF SECTION 4 AND THE NORTHEAST CORNER OF SECTION 3, THE CALCULATED CORNER IS ONE FOOT EAST OF THE FOUND MONUMENT. USING THE RECORD DISTANCE OF 2545 FEET FROM THE WEST 1/4 CORNER OF SECTION 3, THE FOUND MONUMENT IS 3.75 FEET NORTH OF THE RECORD. ALTHOUGH THERE IS NO RECORD OF THE FOUND MONUMENT, AT LEAST NOT FOUND BY THIS SURVEY, IT IS OPINIONED THAT THE FOUND MONUMENT IS A PERPETUATION OF THE AFORESAID 6" X 6" X 24" STONE MONUMENT. THE THEORETICAL UNCERTAINTY OF ITS LOCATION IS WITHIN THE DECLARED TOLERANCE OF THIS SURVEY.

Thomas A. Oesterling 10/31/07
DATE

THOMAS A. OESTERLING
REG. LAND SURVEYOR NO. 11462
STATE OF INDIANA
ABONMARCHE CONSULTANTS OF INDIANA, LLC

REVISED: 9/28/07 COORDINATE VALUE

THOMAS A. OESTERLING
REGISTERED
No.
11462
STATE OF
INDIANA
LAND SURVEYOR

E:\CIVIL 3D\ENG PROJ\M60493\dwg\60493-PNT#1356.dwg, 10/9/2007 1:56:12 PM, 1:1