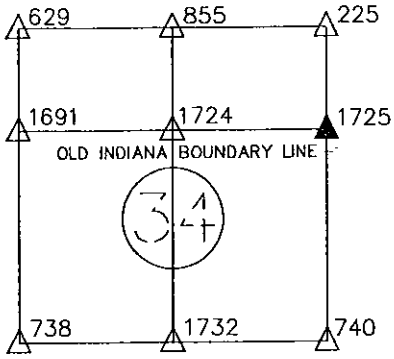


CORNER I.D. #1725

# CORNER RECORD
# ST. JOSEPH COUNTY, IN

OFFICE OF THE COUNTY SURVEYOR, JOHN McNAMARA, PLS
227 W. JEFFERSON BLVD.
SOUTH BEND, IN 46601 PHONE: (574)235-9631

DATE: 04/04/11
PREPARED BY: MICHAEL J. ROZYCKI, PLS
FIELD CREW: M. ROZYCKI, M. LEWANDOWSKI

NOT TO SCALE

## GREENE TOWNSHIP

## SEC. 34,T37N,R1E

N=2320341.387 E=130310.061
LATITUDE=41°36'58.2474'' LONGITUDE=86°23'23.8157''

SURFACE MARK: SET 5/8" IRON W/ CAP "ABONMARCHE FIRM #50" (-1.5')
ALL DISTANCE UNITS ARE U.S. SURVEY FEET

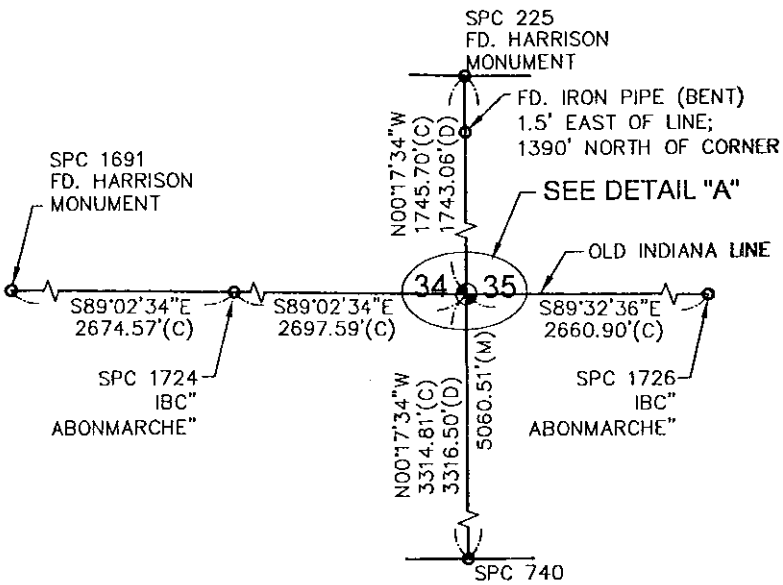


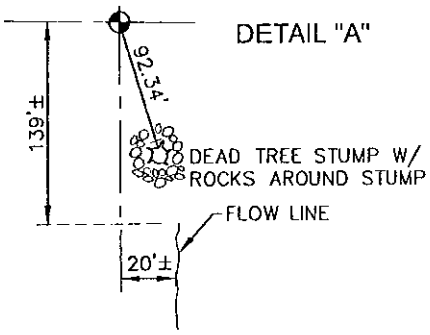


LEGEND

- SECTION CORNER
- SET 5/8" REBAR ABONMARCHE CONTROL POINT
- MONUMENT
- (C) CALCULATED
- (D) 1906
- (M) MEASURED
- MAG NAIL/CAP SET IN TREE STUMP

## SURVEYOR'S REPORT

ACCORDING TO THE COUNTY CORNER RECORDS, NO MONUMENT OR WITNESS POINTS EXIST FOR SUBJECT CORNER. ITS POSITION WAS ESTABLISHED BY THE NORTH-SOUTH INTERSECTION BETWEEN THE SOUTHEAST AND NORTHEAST CORNERS OF SECTION 34 AND THE EAST-WEST EXTENSION OF THE CORNERS ON THE OLD INDIANA LINE (SPA 1691 TO SPA 1724). SAID POSITION AGREED CLOSE WITH THE YEAR 1906 RECORDS.

THE MEASURED COORDINATE VALUES AND DISTANCES SHOWN ON THE PLAT OF SURVEY ARE A RESULT OF REAL TIME KINEMATIC OBSERVATIONS ORIGINATED FROM A PERMANENT BASE STATION WHICH POSITION IS BASED UPON A MINIMALLY CONSTRAINED, LEAST SQUARES ADJUSTED SURVEY. SAID SURVEY CONTAINED NATIONAL GEODETIC SURVEY (NGS), 1ST ORDER HORIZONTAL (OR BETTER) CONTROL MONUMENTS: DG9007, ME3288, ME2210, ME0042; UTILIZING THEIR PUBLISHED INDIANA STATE PLANE COORDINATE, EAST ZONE (1302), NORTH AMERICAN DATUM 83 (1997 ADJUSTMENT) COORDINATE VALUES.

GRID COORDINATES ARE SHOWN TO THREE DECIMAL PLACES TO ENSURE ACCURACY WHEN WORKING WITH THESE NUMBERS. IT IS NOT INTENDED AS A STATEMENT OF RELATIVE POSITIONAL ACCURACY.

MICHAEL J. ROZYCKI
REG. LAND SURVEYOR NO. 20500010
STATE OF INDIANA
ABONMARCHE CONSULTANTS OF INDIANA, LLC

5/10/11
DATE

MICHAEL J. ROZYCKI
REGISTERED
LS20500010
STATE OF
INDIANA
LAND SURVEYOR

E:\CIVIL 3D\ENG PROJ\110001\dwg\110001sec_cor.dwg, 1725, 5/9/2011 3:08:15 PM, 1:1