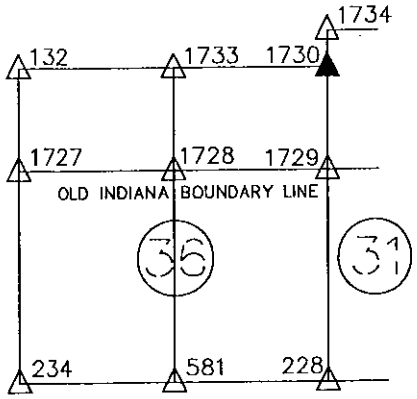

CORNER I.D. #1730

CORNER RECORD
ST. JOSEPH COUNTY, IN

OFFICE OF THE COUNTY SURVEYOR, JOHN McNAMARA, PLS
227 W. JEFFERSON BLVD.
SOUTH BEND, IN 46601 PHONE: (574)235-9631

DATE: 03/21/11, 04/07/11
PREPARED BY: MICHAEL J. ROZYCKI, PLS
FIELD CREW: M. ROZYCKI, M. LEWANDOWSKI

GREENE TOWNSHIP

N=2322019.938 E=141161.721
LATITUDE=41°37'15.7043'' LONGITUDE=86°21'01.1317''

NOT TO SCALE

SEC. 36,T37N,R1E

SURFACE MARK: SET HARRISON MONUMENT
ALL DISTANCE UNITS ARE U.S. SURVEY FEET

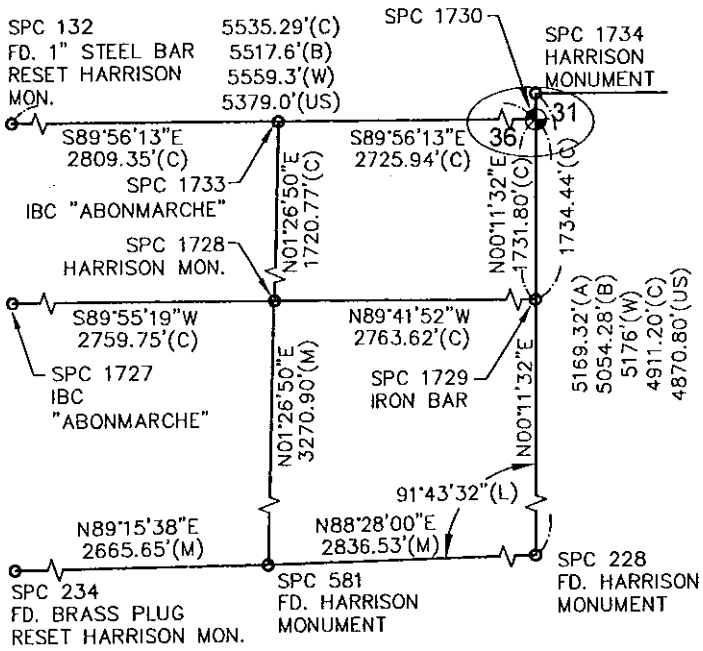

DETAIL "A"

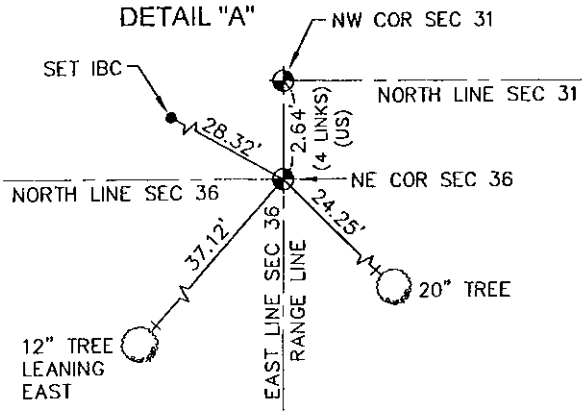

NOTE: UNDERGROUND GAS PIPELINE IN GENERAL AREA OF CORNER

LEGEND

⊕	SECTION CORNER	(A)	1877
o	MONUMENT	(B)	1895
•	SET 5/8" REBAR ABONMARCHE CONTROL POINT	(C)	CALCULATED
		(L)	LANG FEENEY PLAT
		(M)	MEASURED
	MAG NAIL/CAP SET IN TREE	(W)	WPA
(IBC)	IRON BAR WITH CAP	(US)	GOVERNMENT NOTES

SURVEYOR'S REPORT

ACCORDING TO THE COUNTY CORNER RECORDS, A STONE WITH WITNESS POSTS WAS CALLED FOR, BUT NEITHER WERE FOUND. AN UNDERGROUND GAS PIPELINE WAS FOUND IN THE GENERAL LOCATION OF THE CALCULATED CORNER. IN MY OPINION, WHEN THE PIPELINE WAS INSTALLED THE STONE AND POSTS WERE DESTROYED. THE CORNER WAS CALCULATED ON LINE (SPC 1734 TO SPC 228), BEING 2.64 FEET SOUTH OF SPC 1734.

THE MEASURED COORDINATE VALUES AND DISTANCES SHOWN ON THE PLAT OF SURVEY ARE A RESULT OF REAL TIME KINEMATIC OBSERVATIONS ORIGINATED FROM A PERMANENT BASE STATION WHICH POSITION IS BASED UPON A MINIMALLY CONSTRAINED, LEAST SQUARES ADJUSTED SURVEY. SAID SURVEY CONTAINED NATIONAL GEODETIC SURVEY (NGS), 1ST ORDER HORIZONTAL (OR BETTER) CONTROL MONUMENTS: DG9007, ME3288, ME2210, ME0042; UTILIZING THEIR PUBLISHED INDIANA STATE PLANE COORDINATE, EAST ZONE (1302), NORTH AMERICAN DATUM 83 (1997 ADJUSTMENT) COORDINATE VALUES.

GRID COORDINATES ARE SHOWN TO THREE DECIMAL PLACES TO ENSURE ACCURACY WHEN WORKING WITH THESE NUMBERS. IT IS NOT INTENDED AS A STATEMENT OF RELATIVE POSITIONAL ACCURACY.

5/10/11
DATE

MICHAEL J. ROZYCKI
REG. LAND SURVEYOR NO. 20500010
STATE OF INDIANA
ABONMARCHE CONSULTANTS OF INDIANA, LLC

MICHAEL J. ROZYCKI ★ REGISTERED ★ LS20500010 STATE OF INDIANA LAND SURVEYOR

E:\CIVIL 3D\ENG PROJ\110001\dwg\110001sec_cor.dwg, 1730, 5/9/2011 3:08:59 PM, 1:1