CORNER I.D. #1731

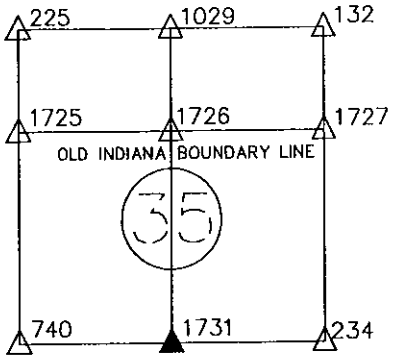

CORNER RECORD
ST. JOSEPH COUNTY, IN

OFFICE OF THE COUNTY SURVEYOR, JOHN McNAMARA, PLS
227 W. JEFFERSON BLVD.
SOUTH BEND, IN 46601 PHONE: (574)235--9631

DATE: 03/31/11
PREPARED BY: MICHAEL J. ROZYCKI, PLS
FIELD CREW: M. ROZYCKI, M. LEWANDOWSKI

GREENE TOWNSHIP

SEC. 35,T37N,R1E

N=2317011.227 E=132985.666
LATITUDE=41°36'25.5684'' LONGITUDE=86°22'48.2298''

NOT TO SCALE

SURFACE MARK: SET 5/8" IRON BAR W/ CAP "ABONMARCHE FIRM #50" ON EDGE OF WATER
ALL DISTANCE UNITS ARE U.S. SURVEY FEET

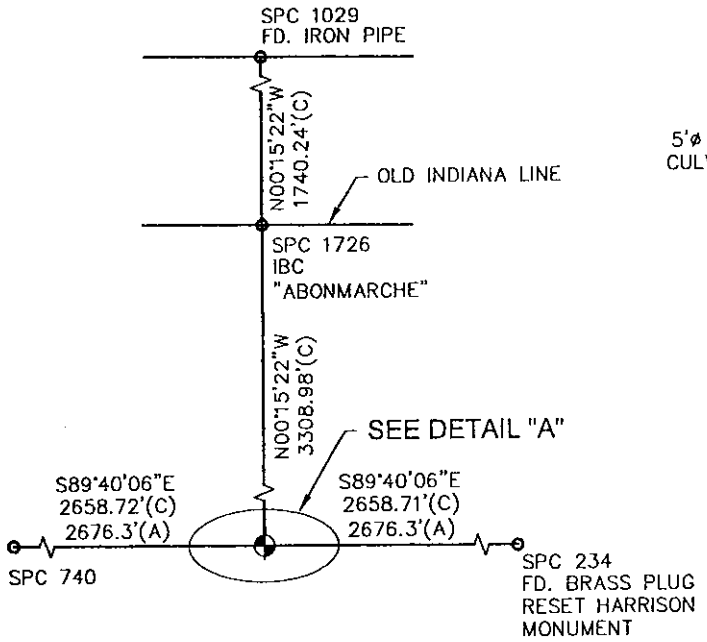

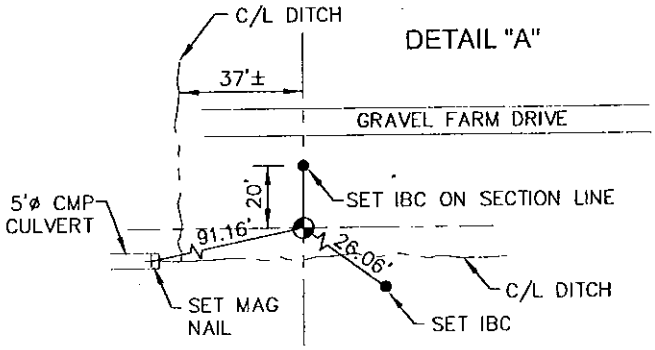

LEGEND

- SECTION CORNER
- SET 5/8" REBAR ABONMARCHE CONTROL POINT
- MONUMENT
- (A) 1856
- (C) CALCULATED
- (IBC) IRON BAR WITH CAP
- MAG NAIL ON TOP OF 5'ø CMP CULVERT

SURVEYOR'S REPORT

ACCORDING TO THE COUNTY CORNER RECORDS, NO MONUMENT OR WITNESS POINTS EXIST FOR SUBJECT CORNER. THE CORNER WAS CALCULATED AT AN EVEN SPLIT BETWEEN THE SOUTHWEST AND SOUTHEAST CORNERS OF SECTION 35. THIS IS THE SAME WAY THE 1856 GOVERNMENT NOTES ESTABLISHED SAID CORNER. THE CORNER POSITION FELL IN A FARM DITCH, SO ANY MONUMENTATION THAT MAY HAVE EXISTED WOULD HAVE BEEN DESTROYED BY DITCH MAINTENANCE.

THE MEASURED COORDINATE VALUES AND DISTANCES SHOWN ON THE PLAT OF SURVEY ARE A RESULT OF REAL TIME KINEMATIC OBSERVATIONS ORIGINATED FROM A PERMANENT BASE STATION WHICH POSITION IS BASED UPON A MINIMALLY CONSTRAINED, LEAST SQUARES ADJUSTED SURVEY. SAID SURVEY CONTAINED NATIONAL GEODETIC SURVEY (NGS), 1ST ORDER HORIZONTAL (OR BETTER) CONTROL MONUMENTS: DG9007, ME3288, ME2210, ME0042; UTILIZING THEIR PUBLISHED INDIANA STATE PLANE COORDINATE, EAST ZONE (1302), NORTH AMERICAN DATUM 83 (1997 ADJUSTMENT) COORDINATE VALUES.

GRID COORDINATES ARE SHOWN TO THREE DECIMAL PLACES TO ENSURE ACCURACY WHEN WORKING WITH THESE NUMBERS. IT IS NOT INTENDED AS A STATEMENT OF RELATIVE POSITIONAL ACCURACY.

MICHAEL J. ROZYCKI
REG. LAND SURVEYOR NO. 20500010
STATE OF INDIANA
ABONMARCHE CONSULTANTS OF INDIANA, LLC

5/10/11
DATE

MICHAEL J. ROZYCKI
REGISTERED
LS20500010
STATE OF
INDIANA
LAND SURVEYOR

E:\CIVIL 3D\ENG PROJ\1110001\dwg\1110001sec_cor.dwg, 1731, 5/9/2011 3:09:07 PM, 1:1