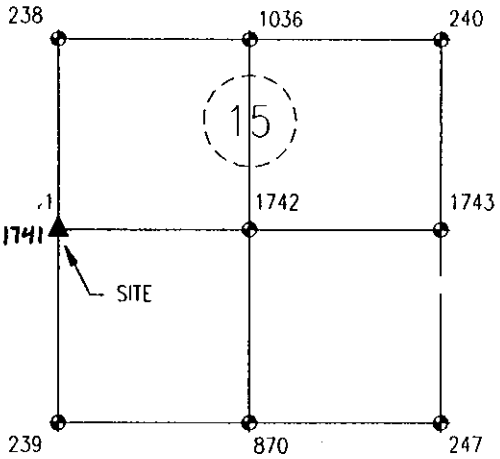

CORNER I.D. #1741

CORNER RECORD
ST. JOSEPH COUNTY, IN.

JOHN McNAMAARA, PLS
OFFICE OF THE COUNTY SURVEYOR
227 W. JEFFERSON BLVD.
SOUTH BEND, IN. 46601 PHONE (574) 235-9631

DATE: 3/21/12
PREPARED BY: KAW
FIELD CREW: AG/JM

NOT TO SCALE

TOWNSHIP

West 1/4 SEC. 15 T36, R2E

NORTH: #2303948.445
EAST: #156963.559

LATITUDE: #41°34'18.3549"
LONGITUDE: #86°17'31.3627"

HARRISON MONUMENT SET ON SURFACE IN CONCRETE

NOTE: ALL DISTANCES ARE US STANDARD FEET

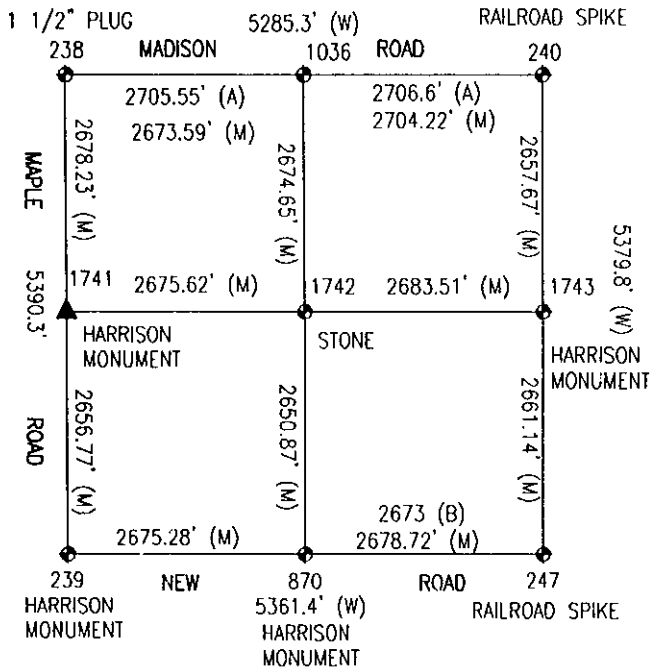

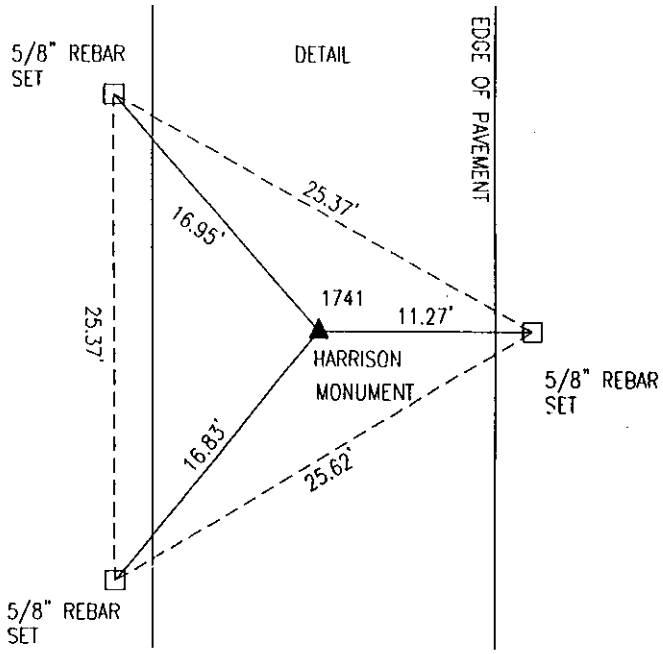

Legend

- ▲ SECTION CORNER SET
- ◆ SECTION CORNER FOUND
- ☐ 5/8" REBAR SET

(A) - 1934
(B) - 1880
(W) - 1939
(M) - MEASURED

SURVEYOR'S REPORT:

WEST QUARTER CORNER SEC 15-36N-2E

A ONE-INCH PINCH TOP IRON PIPE WAS FOUND AT THIS TIME. THE LOCATION MATCHES THE RECORD DISTANCES FOUND IN THE LANG, FEENEY & ASSOCIATES OFFICE NOTES AND REFERENCED IN THE ST. JOSEPH COUNTY SURVEYOR'S OFFICE. A HARRISON MONUMENT WAS SET IN PLACE OF SAID IRON PIPE AND WITNESSES WERE TAKEN AND SHOWN HEREON.

TERANCE D LANG
REGISTERED
NO.
S-0523
STATE OF
INDIANA
LAND SURVEYOR

Terance D. Lang
TERANCE D. LANG, RLS No. S-0523

MARCH 21, 2012
DATE

Lang - Feeney and Associates, Inc.