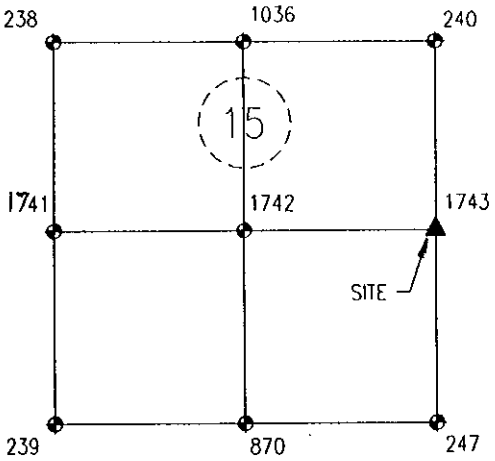

CORNER I.D. #1743

CORNER RECORD
ST. JOSEPH COUNTY, IN.

JOHN McNAMAARA, PLS
OFFICE OF THE COUNTY SURVEYOR
227 W. JEFFERSON BLVD.
SOUTH BEND, IN. 46601 PHONE (574) 235-9631

DATE: 3/21/12
PREPARED BY: KAW
FIELD CREW: AG/JM

NOT TO SCALE

TOWNSHIP

EAST 1/4 SEC. 15 T36, R2E

NORTH: #2303950.973
EAST: #162322.681

LATITUDE: #41°34'187573"
LONGITUDE: #86°16'20.8587"

HARRISON MONUMENT SET ON SURFACE IN CONCRETE

NOTE: ALL DISTANCES ARE US STANDARD FEET

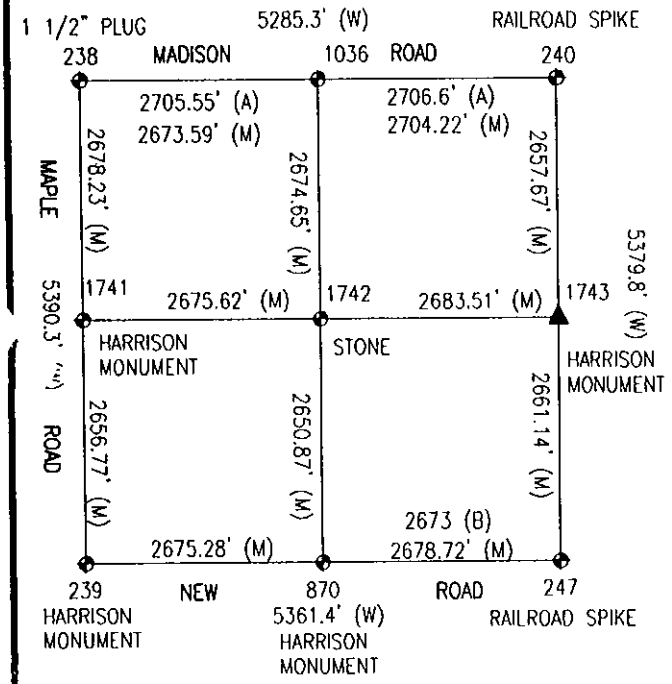

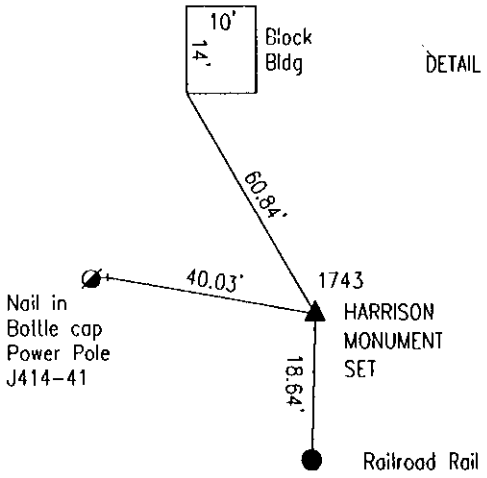

Legend

- ▲ SECTION CORNER SET
- ◆ SECTION CORNER FOUND
- ● RAILROAD RAIL
- POWER POLE
- (A) - 1934
- (B) - 1880
- (W) - 1939
- (M) - MEASURED

SURVEYOR'S REPORT:

EAST QUARTER CORNER SEC 15-36N-2E

A THREE QUARTER-INCH OPEN TOP IRON PIPE WAS FOUND AT THIS TIME. THE LOCATION MATCHES THE RECORD DISTANCES FOUND IN THE LANG, FEENEY & ASSOCIATES OFFICE NOTES. A HARRISON MONUMENT WAS SET IN PLACE OF SAID IRON PIPE AND WITNESSES WERE TAKEN AND SHOWN HEREON.

TERANCE D. LANG REGISTERED NO. S-0523 STATE OF INDIANA LAND SURVEYOR

Terance D. Lang
TERANCE D. LANG, RLS No. S-0523

MARCH 21, 2012
DATE

Lang - Feeney and Associates, Inc.