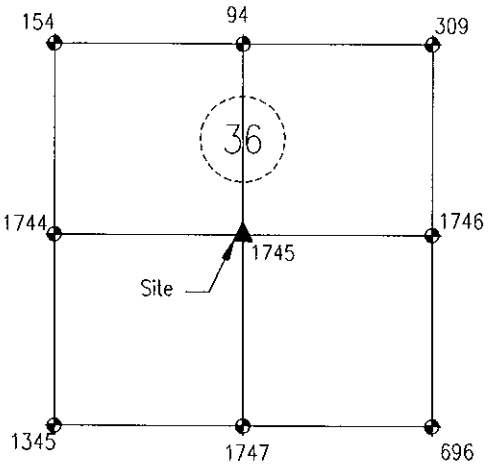


**CORNER I.D. #1745**

# CORNER RECORD
# ST. JOSEPH COUNTY, IN.


JOHN McNAMAARA, PLS
OFFICE OF THE COUNTY SURVEYOR
227 W. JEFFERSON BLVD.
SOUTH BEND, IN. 46601 PHONE (574) 235-9631


DATE: MARCH 26, 2012
PREPARED BY: KAW
FIELD CREW: AG/JM

NOT TO SCALE

## PORTAGE TOWNSHIP

## CENTER SEC. 36, T38N, R2E

5/8" Rebar with LFA Cap Set

NORTH: #2351097.219 LATITUDE: #41°42'05.0560"
EAST: #170065.150 LONGITUDE: #86°14'43.1609"

Note: All Distances are US Standard Feet

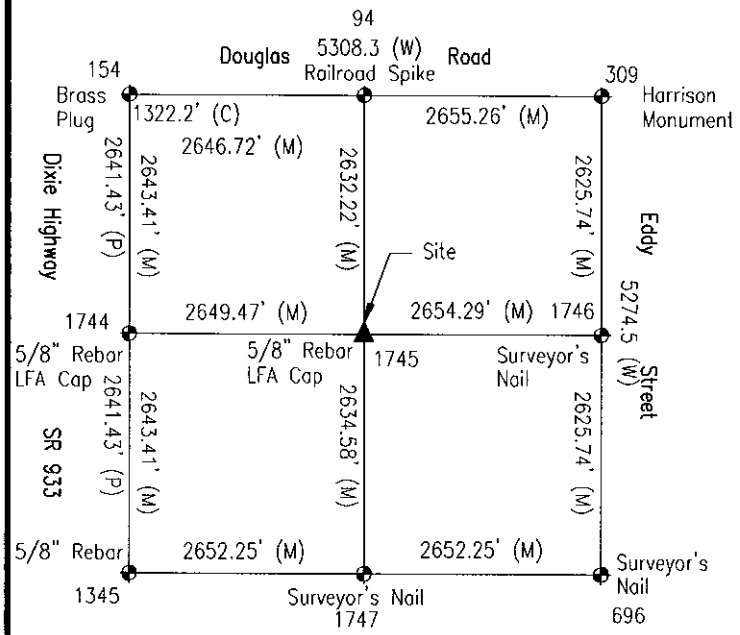


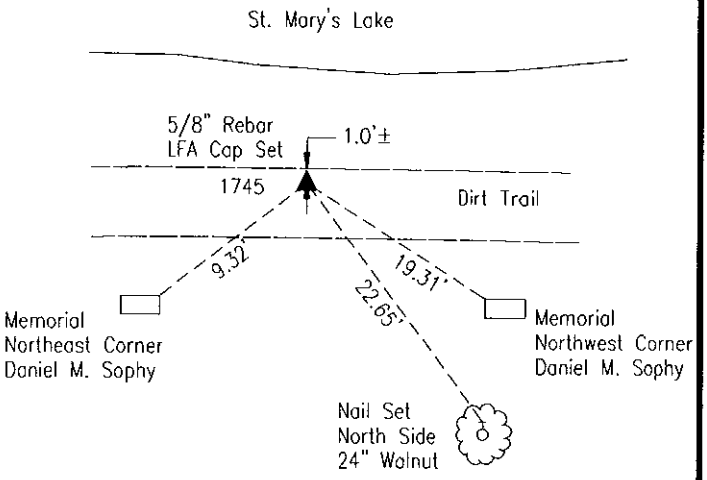


Legend

- ▲ SECTION CORNER SET
- ◆ SECTION CORNER FOUND
- (C) 1856
- (P) 1994
- (W) WPA
- (M) MEASURED

SURVEYOR'S REPORT:

CENTER SECTION CORNER SEC 36-38N-2E

NO MONUMENTATION WAS FOUND AT THIS TIME. THE LOCATION WAS DETERMINED BY BISECTING THE OPPOSITE FOUR QUARTER CORNERS, WHICH IS STANDARD SURVEY PRACTICE FOR THE CENTER OF SECTION. THE ST. JOSEPH COUNTY SURVEYORS OFFICE HAD NO RECORD OF ANYTHING BEING LOCATED AT THIS POINT. A 5/8 INCH REBAR WAS SET AT THIS TIME AND WITNESSED AT THE REQUEST OF THE COUNTY SURVEYOR.

Terance D. Lang March 26, 2012
TERANCE D. LANG, RLS No. S-0523 DATE

**Lang - Feeney and Associates, Inc.**