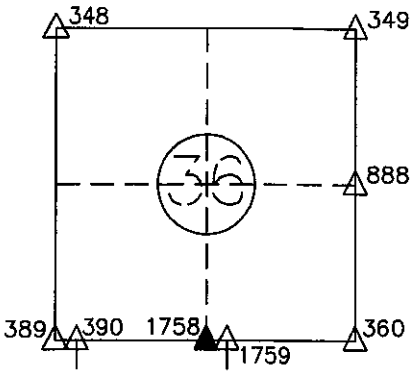

CORNER I.D. # 1758

CORNER RECORD
ST. JOSEPH COUNTY, IN

OFFICE OF THE COUNTY SURVEYOR, JOHN McNAMARA, PLS
227 W. JEFFERSON BLVD.
SOUTH BEND, IN 46601 PHONE: (574)235-9631

DATE: 04/30/13
PREPARED BY: MICHAEL J. ROZYCKI, P.L.S.
FIELD CREW: MICHAEL LEWANDOWSKI, JAMES McPHAIL

MADISON TOWNSHIP

N=2285266.449 E=201842.976

NOT TO SCALE

SEC. 36,T36N,R3E

SURFACE MARK: SET HARRISON MONUMENT
ALL DISTANCE UNITS ARE U.S. SURVEY FEET

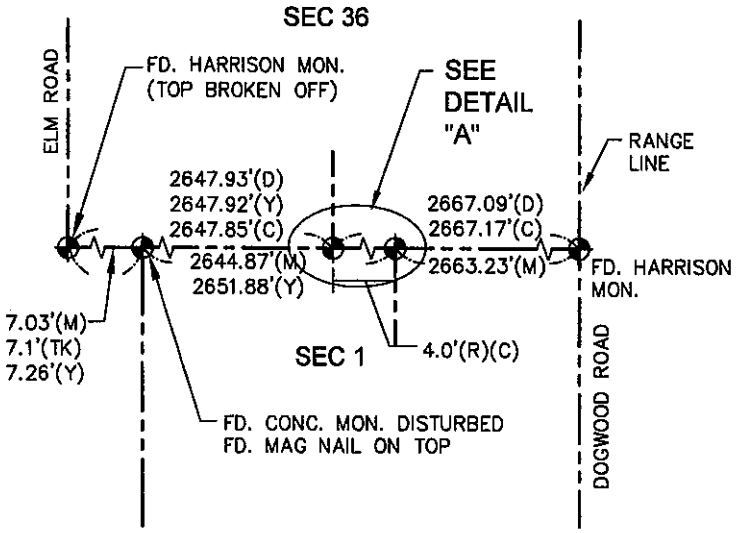

DETAIL "A"

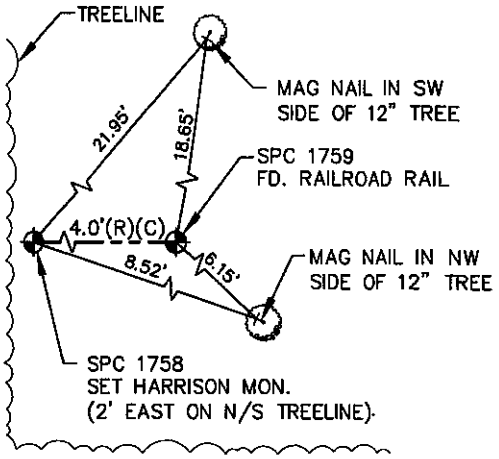

LEGEND

✦	SECTION CORNER
(C)	CALCULATED
(M)	MEASURED
(D)	DANCH/HARNER SURVEY
(Y)	1861 SURVEY
(TK)	TOM KELLER
FD.	FOUND
CONC.	CONCRETE
MON.	MONUMENT
(T)	MAG NAIL IN TREE

SURVEYOR'S REPORT

ACCORDING TO THE COUNTY CORNER RECORDS, NO MONUMENT OR WITNESS POINTS EXIST FOR THE SUBJECT CORNER. A RAIL WAS FOUND AT THE NORTH QUARTER CORNER OF SECTION 1 LYING TO THE SOUTH. HOLDING THE RAIL FOR LINE AND GOING THE RECORD FALLING OF 4 FEET WESTERLY AGREED WITH THE 1861 RECORD DISTANCE, FOR THE WESTERLY HALF MILE OF SECTION 36. DANCH, HARNER & ASSOC. PERFORMED A SURVEY DATED 1/25/2000 AND AGREED CLOSELY WITH THIS RESOLUTION.

THE MEASURED COORDINATE VALUES AND DISTANCES SHOWN ON THE PLAT OF SURVEY ARE A RESULT OF REAL TIME KINEMATIC OBSERVATIONS ORIGINATED FROM A PERMANENT BASE STATION WHICH POSITION IS BASED UPON A MINIMALLY CONSTRAINED, LEAST SQUARES ADJUSTED SURVEY. SAID SURVEY CONTAINED NATIONAL GEODETIC SURVEY (NGS), 1ST ORDER HORIZONTAL (OR BETTER) CONTROL MONUMENTS:DG9007, ME3288, ME2210, ME0042; UTILIZING THEIR PUBLISHED INDIANA STATE PLANE COORDINATE, EAST ZONE (1302), NORTH AMERICAN DATUM 83 (1997 ADJUSTMENT) COORDINATE VALUES. THIS SURVEY MEETS OR EXCEEDS THE RPA REQUIREMENTS OF A SUBURBAN SURVEY (PER IAC 865 1-12-7).

GRID AND GEODETIC COORDINATES ARE SHOWN TO THREE DECIMAL PLACES TO ENSURE ACCURACY WHEN WORKING WITH THESE NUMBERS. IT IS NOT INTENDED AS A STATEMENT OF RELATIVE POSITIONAL ACCURACY.

5/2/13
DATE

MICHAEL J. ROZYCKI, P.L.S.
PROFESSIONAL LAND SURVEYOR #LS20500010
STATE of INDIANA
ABONMARCHE CONSULTANTS, INC.

MICHAEL J. ROZYCKI
REGISTERED
LS20500010
STATE OF
INDIANA
LAND SURVEYOR