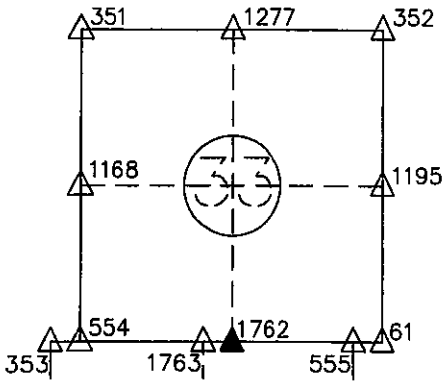

CORNER I.D. # 1762

CORNER RECORD
ST. JOSEPH COUNTY, IN

OFFICE OF THE COUNTY SURVEYOR, JOHN McNAMARA, PLS
227 W. JEFFERSON BLVD.
SOUTH BEND, IN 46601 PHONE: (574)235-9631

DATE: 04/30/13
PREPARED BY: MICHAEL J. ROZYCKI, P.L.S.
FIELD CREW: MICHAEL LEWANDOWSKI, JAMES McPHAIL

MADISON TOWNSHIP

N=2285274.233 E=217870.001

NOT TO SCALE

SEC. 33,T36N,R4E

SURFACE MARK: RAILROAD RAIL
ALL DISTANCE UNITS ARE U.S. SURVEY FEET

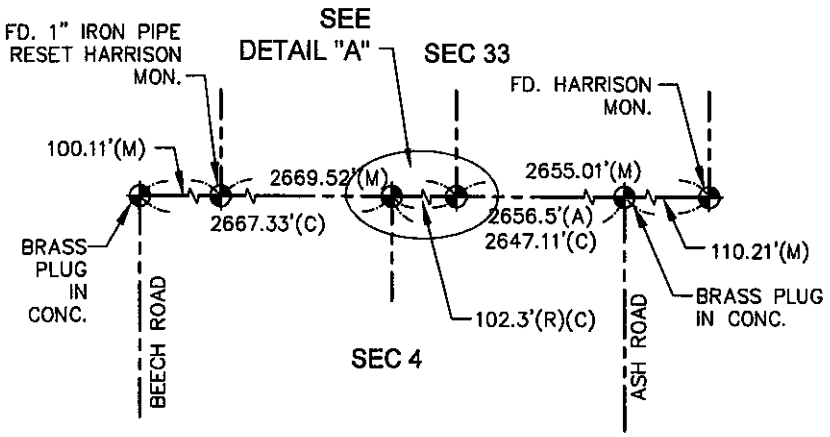

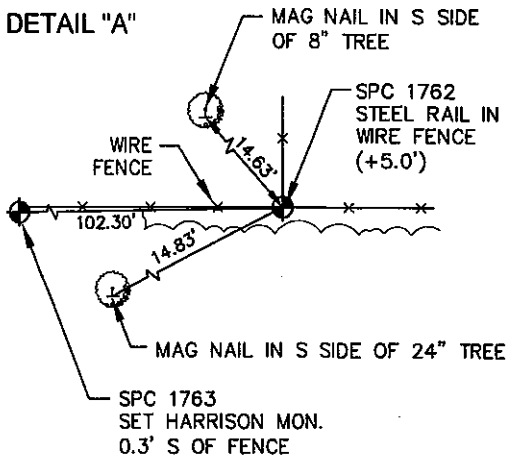

LEGEND

⊕	SECTION CORNER
(A)	1884 SURVEY
(C)	CALCULATED
(M)	MEASURED
(R)	RECORD 1874
CONC.	CONCRETE
FD.	FOUND
MON.	MONUMENT
—×—	WIRE FENCE
⊕	MAG NAIL IN TREE

SURVEYOR'S REPORT

ACCORDING TO THE COUNTY CORNER RECORDS, NO MONUMENT OR WITNESS POINTS EXIST FOR THE SUBJECT CORNER. TALKING WITH COLLEAGUES AND PAROL EVIDENCE HEARD THE RAILROAD RAIL WAS HELD AT THE FENCE INTERSECTION.

THE MEASURED COORDINATE VALUES AND DISTANCES SHOWN ON THE PLAT OF SURVEY ARE A RESULT OF REAL TIME KINEMATIC OBSERVATIONS ORIGINATED FROM A PERMANENT BASE STATION WHICH POSITION IS BASED UPON A MINIMALLY CONSTRAINED, LEAST SQUARES ADJUSTED SURVEY. SAID SURVEY CONTAINED NATIONAL GEODETIC SURVEY (NGS), 1ST ORDER HORIZONTAL (OR BETTER) CONTROL MONUMENTS: DG9007, ME3288, ME2210, ME0042; UTILIZING THEIR PUBLISHED INDIANA STATE PLANE COORDINATE, EAST ZONE (1302), NORTH AMERICAN DATUM 83 (1997 ADJUSTMENT) COORDINATE VALUES. THIS SURVEY MEETS OR EXCEEDS THE RPA REQUIREMENTS OF A SUBURBAN SURVEY (PER IAC 865 1-12-7).

GRID AND GEODETIC COORDINATES ARE SHOWN TO THREE DECIMAL PLACES TO ENSURE ACCURACY WHEN WORKING WITH THESE NUMBERS. IT IS NOT INTENDED AS A STATEMENT OF RELATIVE POSITIONAL ACCURACY.

5/2/13
DATE

MICHAEL J. ROZYCKI, P.L.S.
PROFESSIONAL LAND SURVEYOR #LS20500010
STATE of INDIANA
ABONMARCHE CONSULTANTS, INC.

MICHAEL J. ROZYCKI
REGISTERED
LS20500010
STATE OF
INDIANA
LAND SURVEYOR