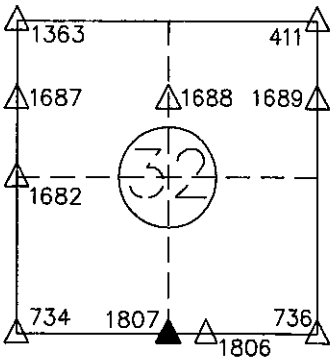

CORNER I.D. # 1807

CORNER RECORD
ST. JOSEPH COUNTY, IN

OFFICE OF THE COUNTY SURVEYOR, JOHN McNAMARA, PLS
227 W. JEFFERSON BLVD.
SOUTH BEND, IN 46601 PHONE: (574)235-9631

DATE: 08/15/14
PREPARED BY: MICHAEL J. ROZYCKI, P.L.S.
FIELD CREW: MICHAEL LEWANDOWSKI & CAMERON BERON

OLIVE TOWNSHIP

N=2317065.225 E=116977.776

NOT TO SCALE

SEC. 32,T37N,R1E

SURFACE MARK: SET HARRISON MONUMENT
ALL DISTANCE UNITS ARE U.S. SURVEY FEET.

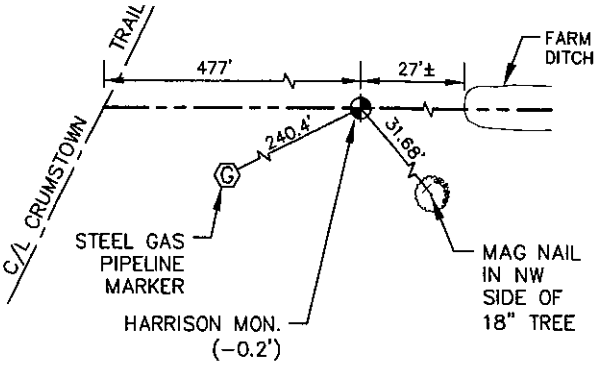

DETAIL "A"

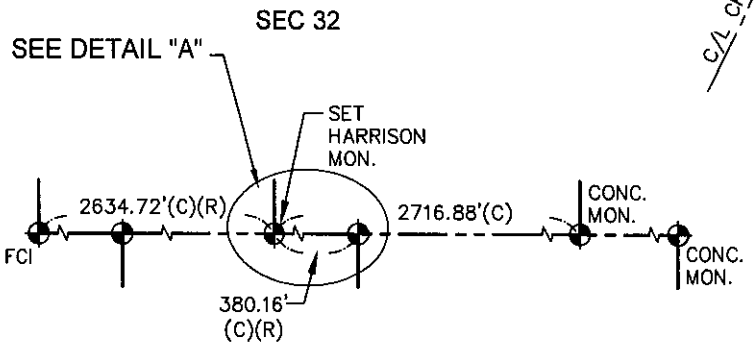

LEGEND

- SECTION CORNER
- MAG NAIL
- GAS PIPELINE MARKER
- (C) CALCULATED
- (R) RECORD (1899)
- FCI FOUND CAPPED IRON
- MON. MONUMENT
- FD. FOUND
- CONC. CONCRETE
- TREE

SURVEYOR'S REPORT

ACCORDING TO THE COUNTY CORNER RECORDS, A POST AND WITNESS TREE WERE CALLED FOR. NEITHER WERE RECOVERED. IN TALKS WITH THE COUNTY SURVEYOR, IT WAS DECIDED TO HOLD THE RECORD 1899 DIMENSION FROM THE SOUTHWEST CORNER OF SECTION 32 TO ESTABLISH SAID POINT.

THE MEASURED COORDINATE VALUES AND DISTANCES SHOWN ON THE PLAT OF SURVEY ARE A RESULT OF REAL TIME KINEMATIC OBSERVATIONS ORIGINATED FROM A PERMANENT BASE STATION WHICH POSITION IS BASED UPON A MINIMALLY CONSTRAINED, LEAST SQUARES ADJUSTED SURVEY. SAID SURVEY CONTAINED NATIONAL GEODETIC SURVEY (NGS), 1ST ORDER HORIZONTAL (OR BETTER) CONTROL MONUMENTS: DG9007, ME3288, ME2210, ME0042; UTILIZING THEIR PUBLISHED INDIANA STATE PLANE COORDINATE, EAST ZONE (1302), NORTH AMERICAN DATUM 83 (1997 ADJUSTMENT) COORDINATE VALUES. THIS SURVEY MEETS OR EXCEEDS THE RPA REQUIREMENTS OF A SUBURBAN SURVEY (PER IAC 865 1-12-7).

GRID AND GEODETIC COORDINATES ARE SHOWN TO THREE DECIMAL PLACES TO ENSURE ACCURACY WHEN WORKING WITH THESE NUMBERS. IT IS NOT INTENDED AS A STATEMENT OF RELATIVE POSITIONAL ACCURACY.

9/8/14

MICHAEL J. ROZYCKI, P.L.S. DATE
PROFESSIONAL LAND SURVEYOR #LS20500010
STATE of INDIANA
ABONMARCHE CONSULTANTS, INC.

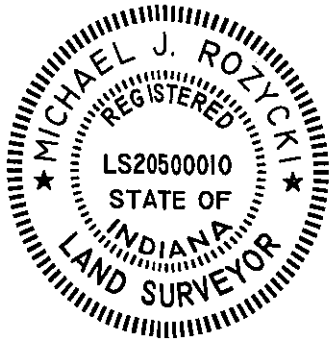

E:\C\VIL 3D\ENG PROJ\13-0701 SJC SEC COR\dwg\130701MASTER.dwg, 1807, 9/8/2014 8:25:28 AM, 1:1