GPS SURVEY – DATA SHEET

PROJECT NAME:	JOB NO:	STATION NO: 1818 STATION NAME:

Deg., Min., & Sec.		STATE PLANE COORDINATE SYSTEM OF 1983 BASED ON NORTH AMERICAN DATUM OF 1983	
Latitude	Longitude	North	East
41°–27'–16.8460 N	86°–30'–19.6226 W	2261779.595	98155.470

Elevation	Geoid Height	Ellipsoid Height	
			Convergence:
			Scale Factor:
			Elevation Factor:
Elevation + Geoid Height = Height			

SKETCH:

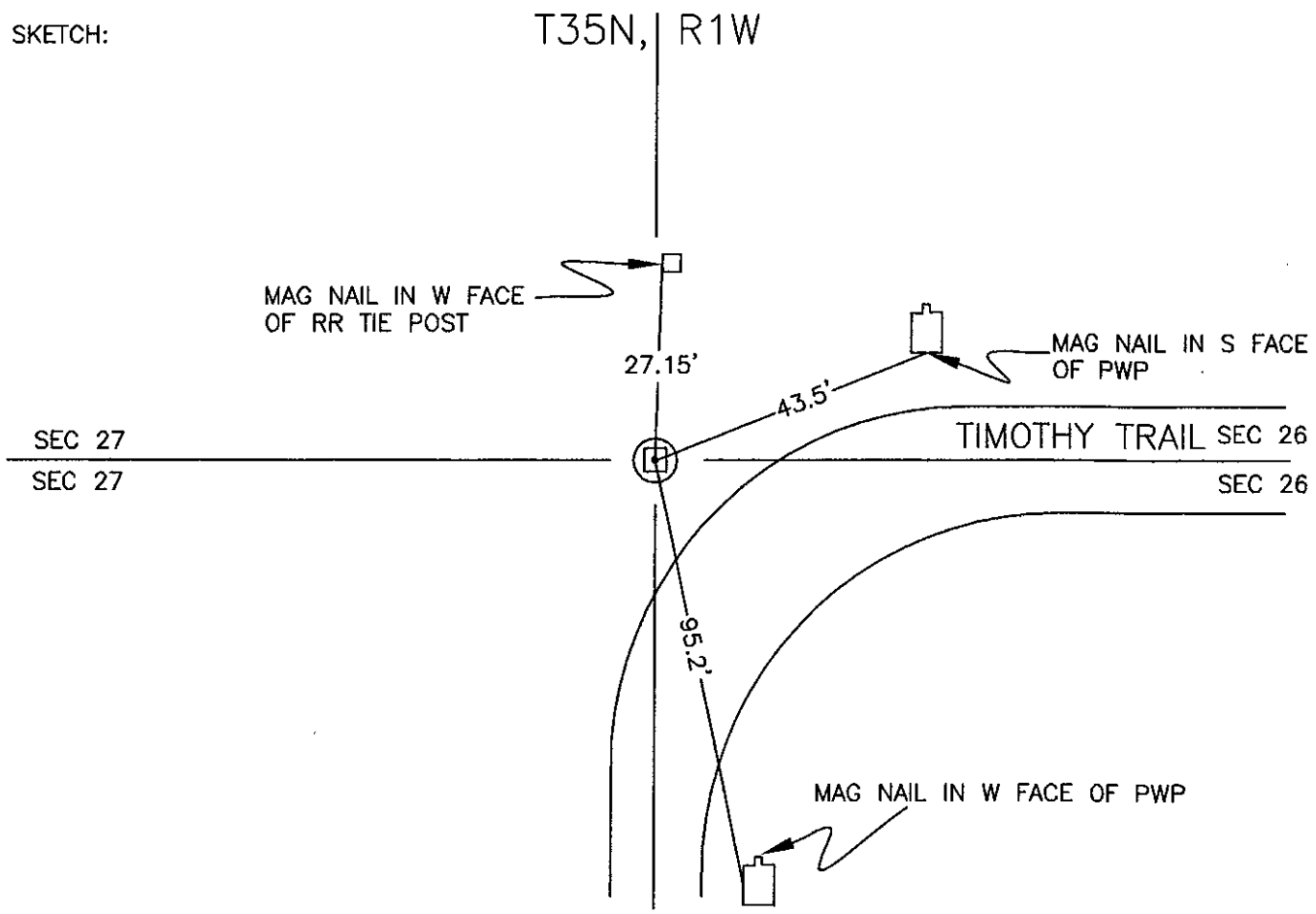

STATE: INDIANA ZONE: EAST

DATE: 6/14/14

FIELD WORK DONE BY: DPS/JL

DATA SHEET PREPARED BY: JL

MONUMENT: RAILROAD CROSSING BOLT w/ PUNCH MARK

REMARKS: SET BY TERRITORIAL ENGINEERING ON 6/11/2014. IRON ROD HONORED IN MALSTAFF MINOR SUBDIVISION WAS NOT FOUND. RE–SET CORNER AS FOUND AND RECORDED IN MALSTAFF'S MINOR SUBDIVISION.